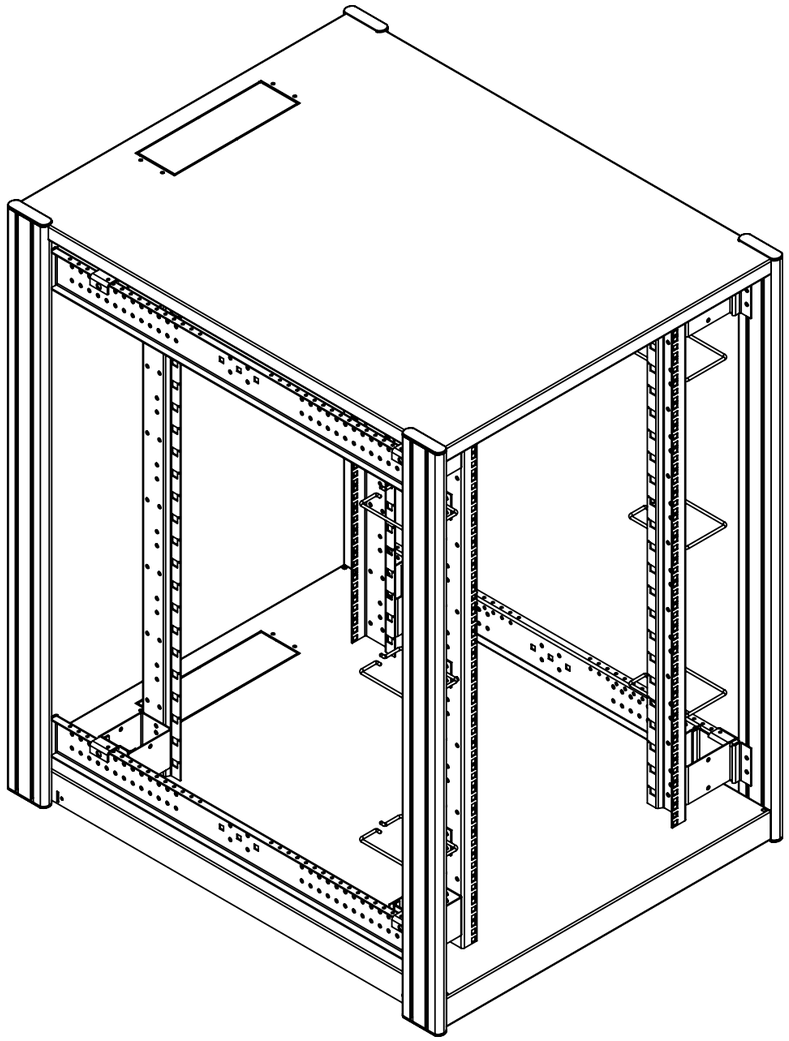

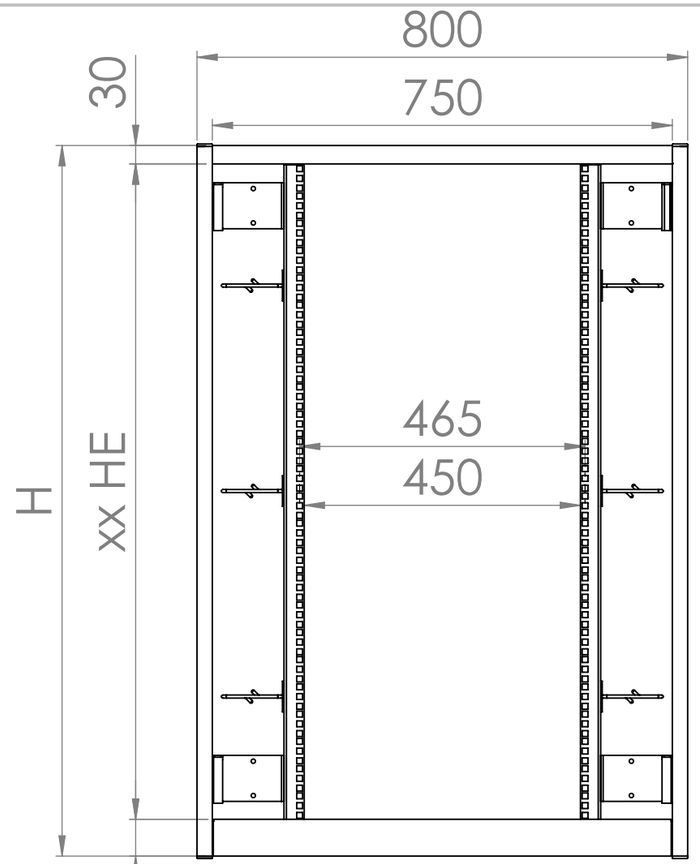

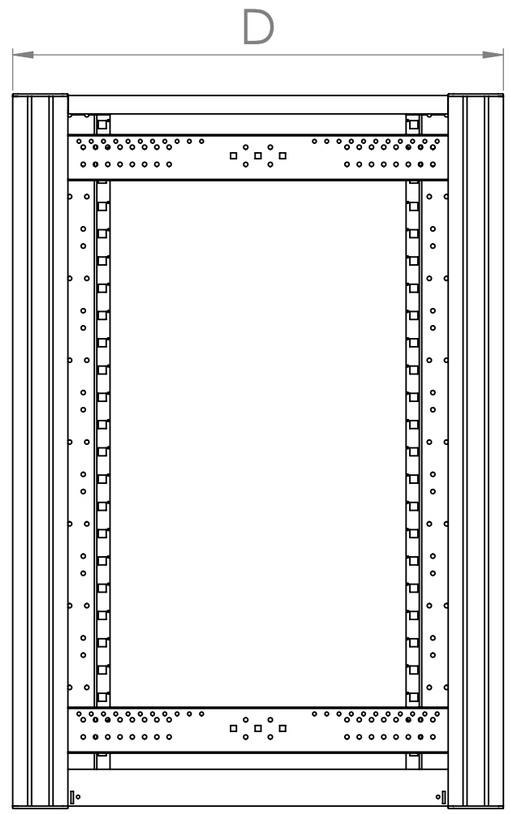

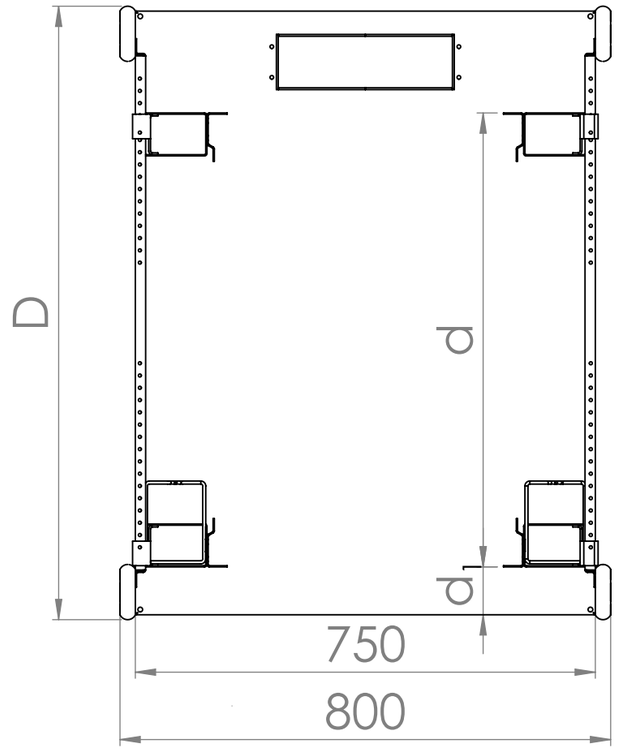

O.D.M. d.o.o.	Naziv in mere: ServerM 80100	Str.: 1/1
		Format: A3